GOYO OPTICAL INC.

Industrial Lens

F0.95 Lenses

Item No.GMY31795MCN

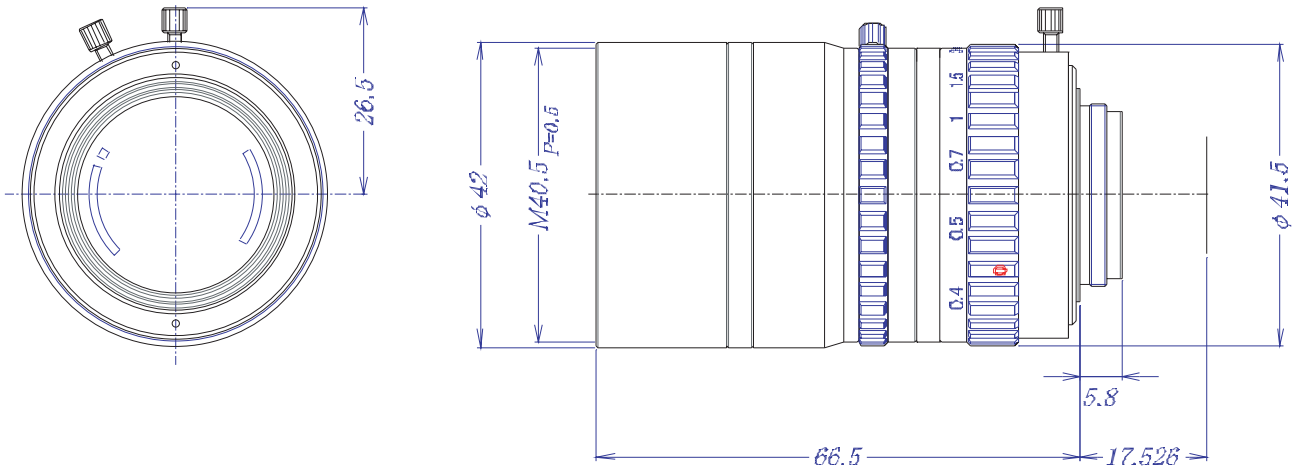

ITEM NO.		GMY31795MCN
Focal Length		17.0 (mm)
Iris Range		F0.95 - 16
Angle of View (Hx V x D)	2/3"	30 x 22 x 38 (mm)
		(mm)
MOD		0.42 (m)
Filter Thread		M=40.5 , P=0.5
Dimention (D x L)		ϕ42 x 67 (mm)
Weight		165 (g)

GOYO OPTICAL Inc.

Japanese Office

3-8-31 HAMAZAKI,
ASAKA,
SAITAMA 351-0033,
JAPAN,
TEL:048-474-2235
FAX:048-474-7373
E-MAIL:info@goyooptical.com

German Office

KURHAUSSTR,3
ROOM N'19
D-55543 BAD KREUZNACH
GERMANY
TEL:0671-4822255
FAX:0671-43603
E-MAIL:info@goyooptical.com